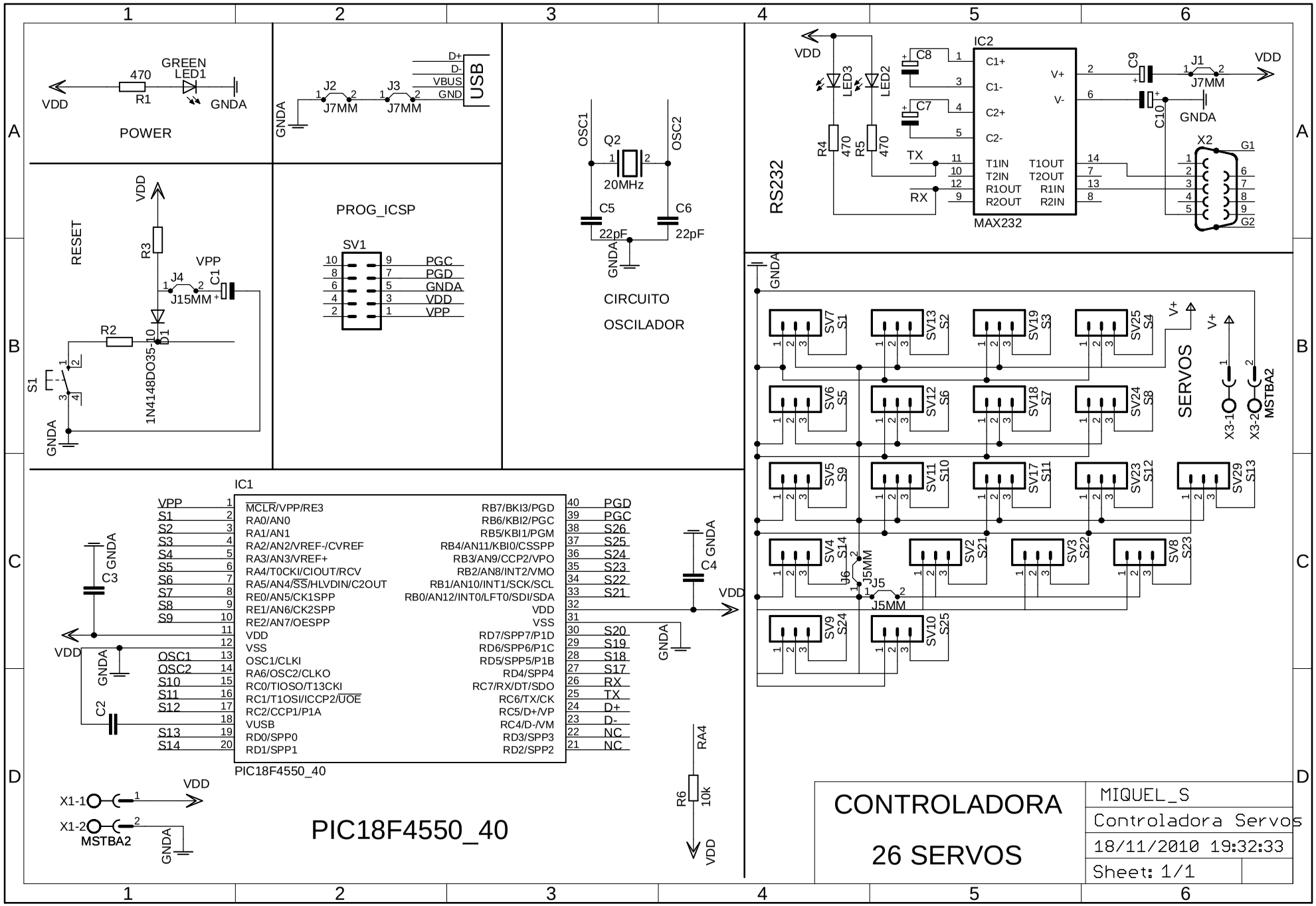
POWER
VDD
470
R1
GREEN
LED1
GNDA
USB
D+
D-
VBUS
GND
J2
J7MM
J3
J7MM
RESET
R3
VPP
J4
J15MM
C1
R2
D1
1N4148DO35-10
S1
PROG_ICSP
SV1
PGC
PGD
GNDA
VDD
VPP
OSC1
OSC2
Q2
20MHz
C5
C6
22pF
22pF
CIRCUITO
OSCILADOR
IC2
C8
C7
C1+
C1-
C2+
C2-
V+
V-
T1IN
T2IN
R1OUT
R2OUT
T1OUT
T2OUT
R1IN
R2IN
MAX232
LED3
LED2
R4
470
R5
470
TX
RX
RS232
C9
C10
J1
J7MM
X2
G1
G2
SERVOS
SV7 S1
SV13 S2
SV19 S3
SV25 S4
SV6 S5
SV12 S6
SV18 S7
SV24 S8
SV5 S9
SV11 S10
SV17 S11
SV23 S12
SV29 S13
SV4 S14
SV2 S21
SV3 S22
SV8 S23
SV9 S24
SV10 S25
J6
J5
J5MM
V+
X3-1
X3-2
MSTBA2
IC1
MCLR/VPP/RE3
RA0/AN0
RA1/AN1
RA2/AN2/VREF-/CVREF
RA3/AN3/VREF+
RA4/T0CKI/CIOUT/RCV
RA5/AN4/SS/HLVDIN/C2OUT
RE0/AN5/CK1SPP
RE1/AN6/CK2SPP
RE2/AN7/OESPP
VDD
VSS
OSC1/CLKI
RA6/OSC2/CLKO
RC0/TIOSO/T13CKI
RC1/T1OSI/ICCP2/UOE
RC2/CCP1/P1A
VUSB
RD0/SPP0
RD1/SPP1
RB7/BKI3/PGD
RB6/KBI2/PGC
RB5/KBI1/PGM
RB4/AN11/KBI0/CSSPP
RB3/AN9/CCP2/VPO
RB2/AN8/INT2/VMO
RB1/AN10/INT1/SCK/SCL
RB0/AN12/INT0/LFT0/SDI/SDA
VDD
VSS
RD7/SPP7/P1D
RD6/SPP6/P1C
RD5/SPP5/P1B
RD4/SPP4
RC7/RX/DT/SDO
RC6/TX/CK
RC5/D+/VP
RC4/D-/VM
RD3/SPP3
RD2/SPP2
PGD
PGC
S26
S25
S24
S23
S22
S21
S20
S19
S18
S17
RX
TX
D+
D-
NC
NC
PIC18F4550_40
C3
C2
C4
RA4
R6
10k
X1-1
X1-2
MSTBA2
PIC18F4550_40
CONTROLADORA
26 SERVOS
MIQUEL_S
Controladora Servos
18/11/2010 19:32:33
Sheet: 1/1